Date: October, 2007
Project: Multi-view Drawing
Project description: Draw a multi-view drawing.

Instructions:
1. Draw over the intersections with a pencil to complete the drawing.

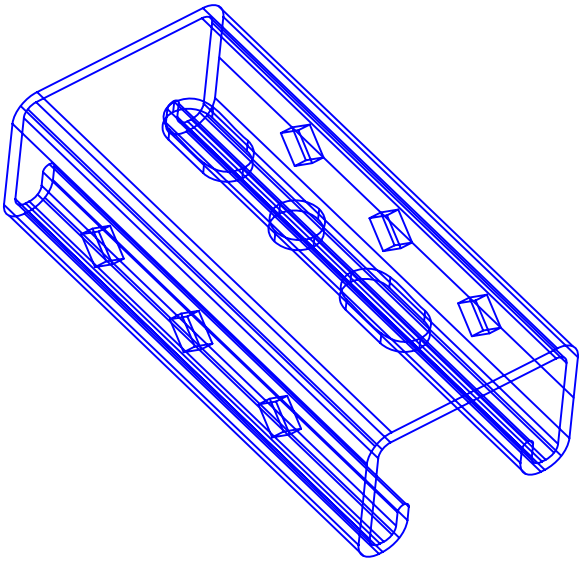

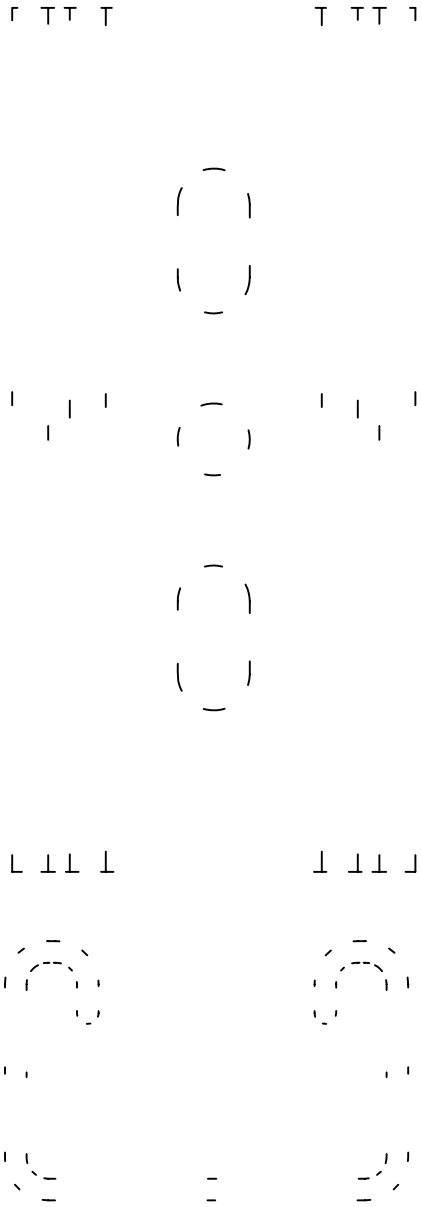

©Melvin G. Peterman 2007. ALL RIGHTS RESERVED. This project may not be copied or transmitted without written permission. Permission is granted to purchaser to print for personal use only.

INSIGHT™ TECHNICAL EDUCATION
877-640-2256
For more information, visit our website
www.insightteched.com
Drawn by: Clay Peterman